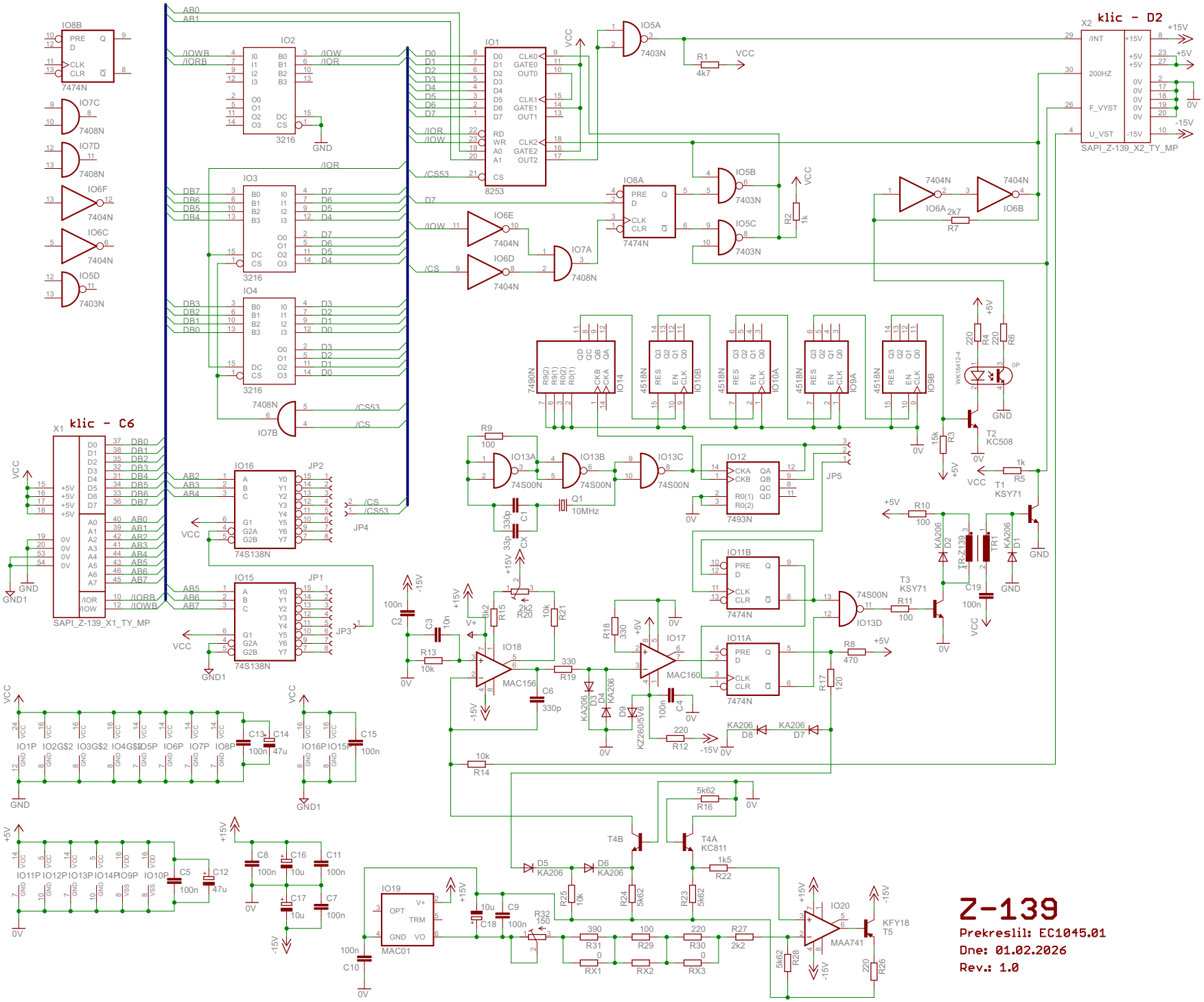
klic - D2
SAPI_Z-139_X2_TY_MP
klic - C6
SAPI_Z-139_X1_TY_MP
8253
3216
74S138N
7474N
7493N
7490N
4518N
MAC156
MAC160
MAC01
MAA741
KFY18
KC508
KSY71
TR-Z139
WK16412-4
10MHz
Z-139
Prekreslil: EC1045.01
Dne: 01.02.2026
Rev.: 1.0