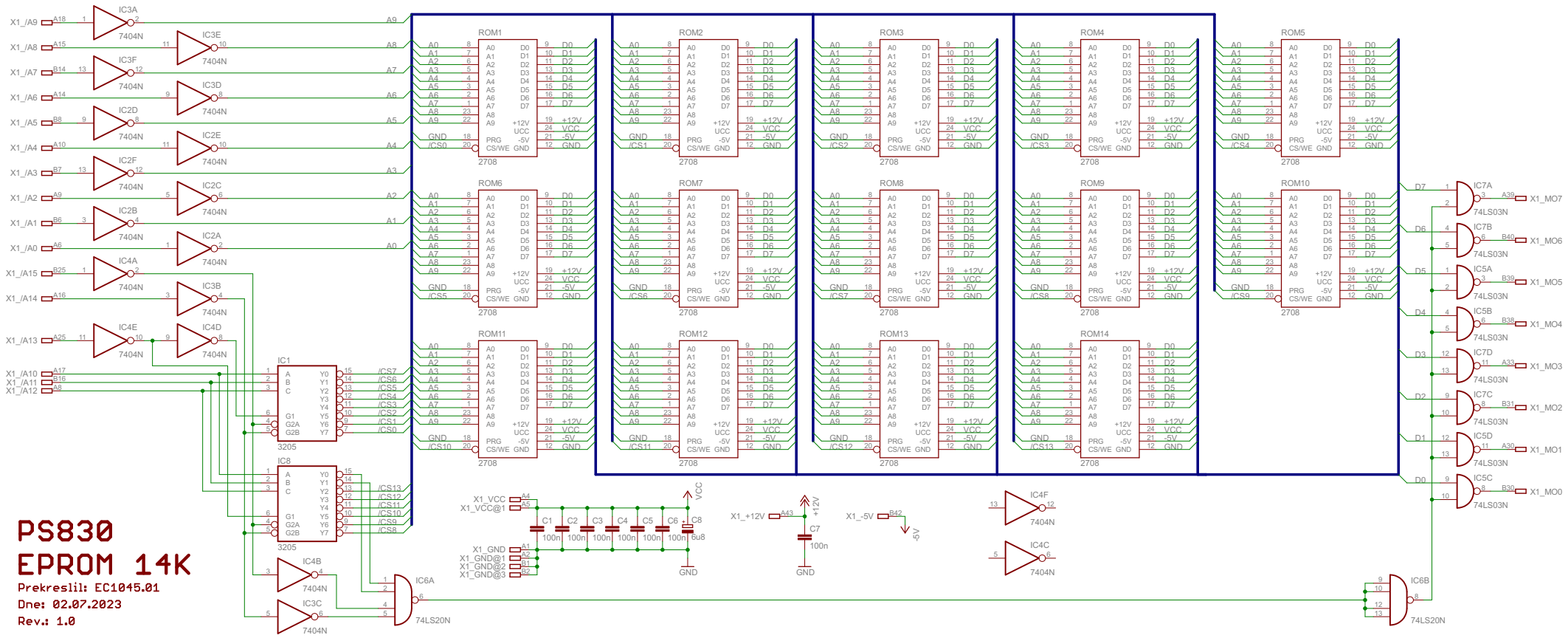
PS830
EPROM 14K
Prekreslil: EC1045.01
Dne: 02.07.2023
Rev.: 1.0
ROM1
ROM2
ROM3
ROM4
ROM5
ROM6
ROM7
ROM8
ROM9
ROM10
ROM11
ROM12
ROM13
ROM14
2708
IC1
IC8
3205
IC3A
IC3E
IC3F
IC3D
IC2D
IC2E
IC2F
IC2C
IC2B
IC2A
IC4A
IC3B
IC4E
IC4D
IC4B
IC3C
IC6A
IC6B
IC4F
IC4C
IC7A
IC7B
IC5A
IC5B
IC7D
IC7C
IC5D
IC5C
7404N
74LS20N
74LS03N
X1_/A9
X1_/A8
X1_/A7
X1_/A6
X1_/A5
X1_/A4
X1_/A3
X1_/A2
X1_/A1
X1_/A0
X1_/A15
X1_/A14
X1_/A13
X1_/A10
X1_/A11
X1_/A12
X1_VCC
X1_VCC@1
X1_GND
X1_GND@1
X1_GND@2
X1_GND@3
X1_+12V
X1_-5V
X1_MO7
X1_MO6
X1_MO5
X1_MO4
X1_MO3
X1_MO2
X1_MO1
X1_MO0
C1
C2
C3
C4
C5
C6
C7
C8
100n
6u8
VCC
GND
+12V
-5V